PARTS LIST			
ITEM	QTY	PART NUMBER	DESCRIPTION
1	1	0770-001-3	M/STEEL- ZINC PLATED LOCK BASE-WITH LH TONGUE
2	1	0770-001-1	M/STEEL-TOP SQUARE DRIVE - ZINC PLATED
3	1	0770-001-2	M/STEEL- BOTTOM SQUARE DRIVE PLATE- ZINC PLATED
4	2	0770-001-5	M/STEEL- STOPPER-NATURAL
5	2	0770-001-7	M/STEEL- ROD GUIDES- ZINC PLATED
6	1	0770-001-4	M/STEEL-LOADED SPRING- ZINC PLATED
7	1	0770-001-6	M/STEEL- RIVIT BOLTS - ZINC PLATED

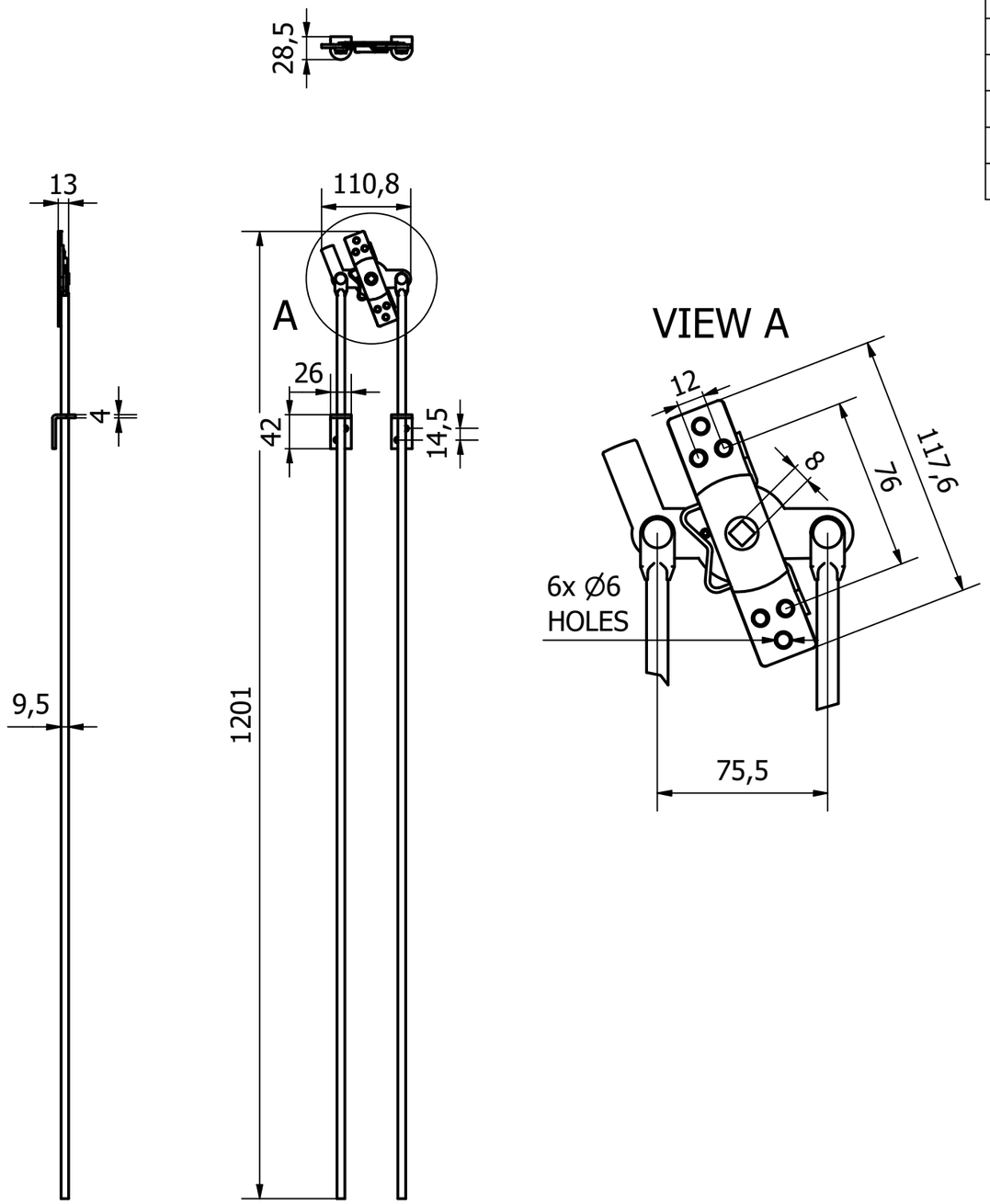

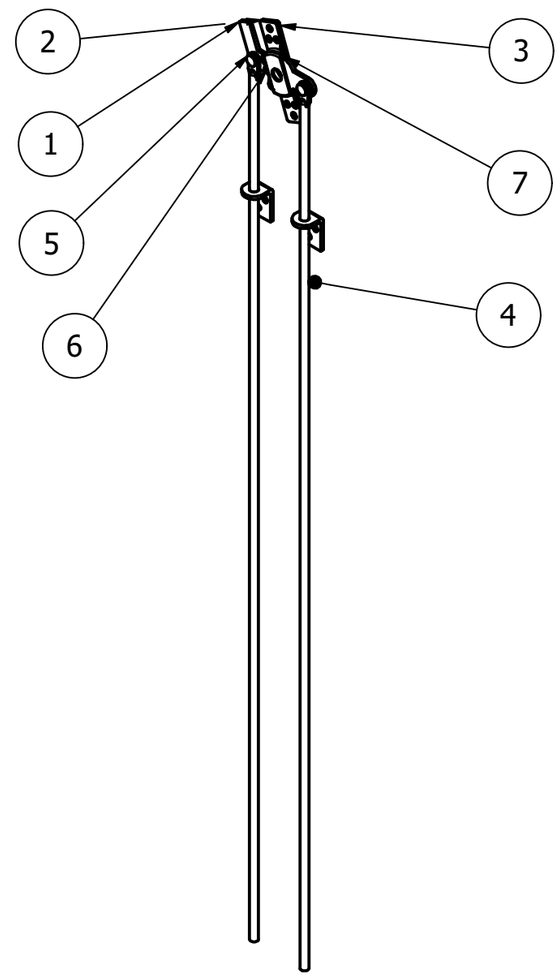

REV	DESCRIPTION	DATE	APPROVED
1	VALIDATION COMPLETE	26/10/21	C.H

GENERAL TOLERANCES ON LENGTHS

0.5 - 6 ± 0.1mm
6 - 30 ± 0.2mm
30 - 120 ± 0.3mm
120 - 400 ± 0.5mm
400 - 1000 ± 0.8mm
1000 - 2000 ± 1.2mm
2000 - 4000 ± 2.0mm

ALBERT JAGGER LTD
GREEN LANE
WALSALL
WEST MIDLANDS
WS2 8HG
PHONE: 01922 471000
FAX: 01922 648021

THIS DRAWING & THE DESIGN SHOWN ARE THE PROPERTY OF ALBERT JAGGER LTD AND MUST NOT BE USED OR COPIED BY A THIRD PARTY WITHOUT PERMISSION

DRAWN BY	CHECKED BY		SCALE	MATERIAL	MASS	FINISH	Date		
S.R	C.H	THIRD ANGLE PROJECTION	1 : 7	SEE TABLE	1.577 kg	SEE TABLE	22/10/2021	ALL DIMS IN MM UNLESS STATED DO NOT SCALE	A3

albert Jagger

ROD LOCK - 3 POINT LOCKING, 2310mm TIP/TIP -LH

0770-001	Edition 1	Sheet 1 / 1