| PART NUMBER | ITEM 1 HOUSING (QTY) | ITEM 2 PADDLE (QTY) | ITEM 3 BUSHING (QTY) | ITEM 4 BUSHING (QTY) | ITEM 5 AXLE (QTY) | ITEM 6 ARM (QTY) | ITEM 7 SPRING (QTY) | ITEM 8 ASSY PLT (QTY) | ITEM 9 BUMPER (QTY) | ITEM 10 WASHER (QTY) | ITEM 11 RIVET (QTY) | ITEM 12 WASHER (QTY) | ITEM 13 PIVOT (QTY) | ITEM 14 LKCYL (QTY) | ITEM 15 LK PAWL (QTY) | ITEM 16 KNOB (QTY) | FINISH 4 | KEYS SUPPLIED YES/NO (QTY) 20 | PART MARKING 1 21 |
|---|---|---|---|---|---|---|---|---|---|---|---|---|---|---|---|---|---|---|---|
| 12219-01 21 | 13026-07 (1) | 12572-12 (1) | 80797 (1) 21 | 80796 (1) 21 | 10989-16 (1) | 80652-15 (1) | 80528-57 (1) | 11304-04 (1) | 81586 (1) 21 | 81243 (1) 21 | 81541-15 (1) | 81245 (1) 21 | 81543-16 (1) | 80793-09 (1) | 12305-16 (1) | 80857 (1) 21 | PAINT,BLACK,MEDIUM GLOSS | YES (2) | 12219 |
| 12219-12 | | | | | | | | 11304-01 (1) | | | | | | | | | | | |

| REVISION | ECN | ECN BY | DESCRIPTION |
|---|---|---|---|
| 19 | 19645 | TEB 4/15/03 | ADDED STAKE DIM |
| 20 | 19720 | GDE 08/14/03 | MOVED DATE CODE FROM PIVOT PLATE TO THE PIVOT. REVISED BOM. ADDED PART WEIGHT. |
| 21 | 38013 | RLO 9-18-12 | ADDED -01 VERSION,EXPLODED VIEW,ENVELOPE DIMENSIONS, PART MARKING COLUMN.UPDATED DRAWING FORMAT,PART NUMBER, PART MARK,VIEWS.BOM;REMOVED -00 TO AGREE WITH AS400. |

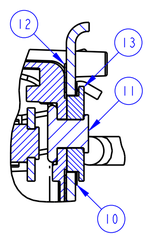


SECTION A-A 21

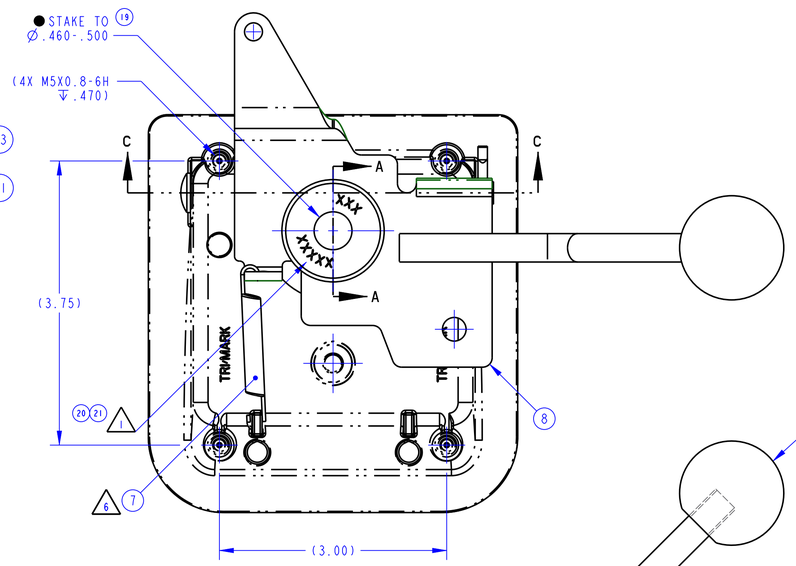


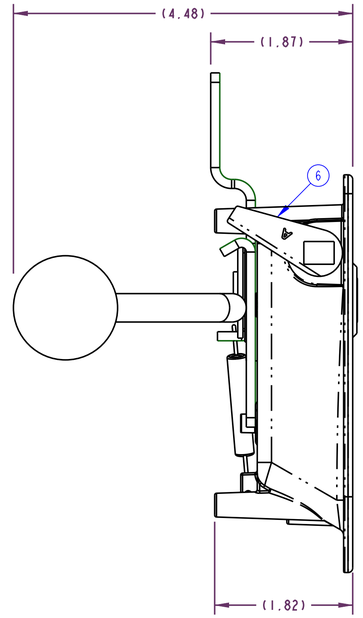


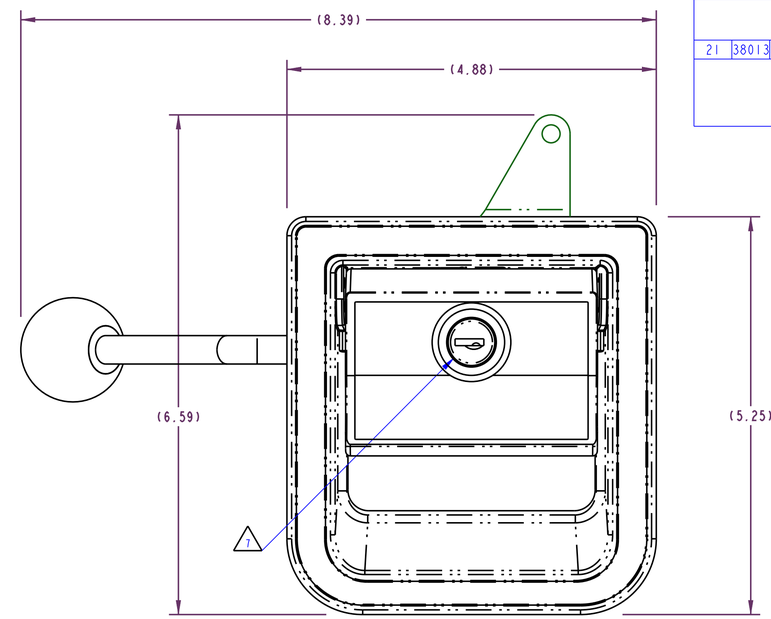


1

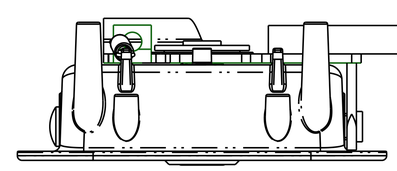

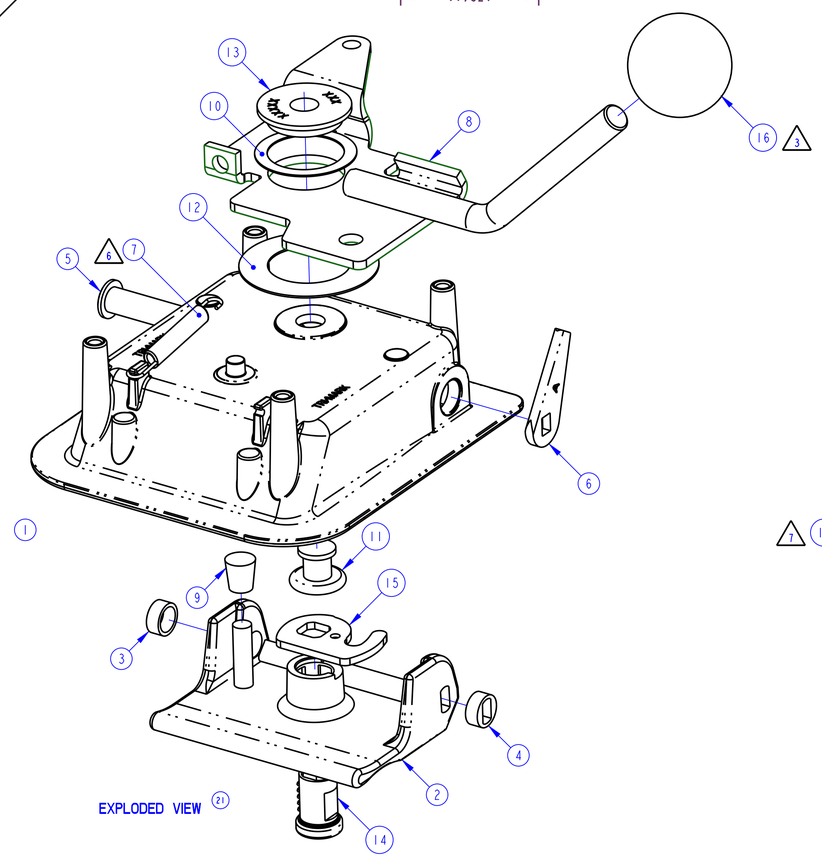


EXPLODED VIEW 21

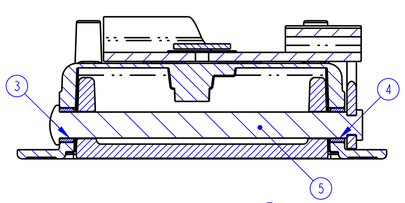


SECTION C-C 21

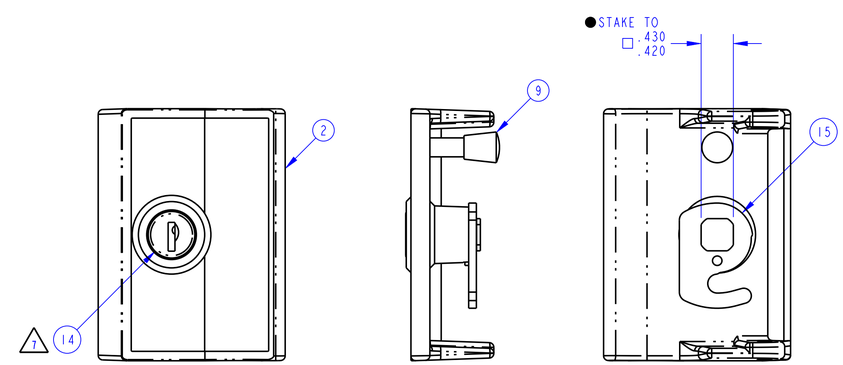


PADDLE ASSEMBLY DETAIL

NOTES: UNLESS OTHERWISE SPECIFIED;

20 1 STAMP PIVOT (ITEM 13) WITH PART NUMBER AND DATE CODE PER ES-121. LOCATE APPROXIMATELY AS SHOWN. ORIENTATION IS NOT IMPORTANT.

2. EXTERIOR PADDLE (ITEM 2) DOES NOT MOVE WHEN IN LOCKED POSITION.

3 KNOB (ITEM 16) TO BE SCREWED ONTO HANDLE.

4 FINISH IS FOR REFERENCE ONLY.

5. TORQUE MOUNTING FASTENERS TO 7 FT-LBS.

6 SPRING (ITEM 7) ORIENTATION IMPORTANT.

7 LOCKCYLINDER (ITEM 14) TO BE ASSEMBLED IN UNLOCKED POSITION. SHIP ASSEMBLY WITH LOCKCYLINDER IN UNLOCKED POSITION AS SHOWN.

21 ● INDICATES REQUIRED ASSEMBLY INFORMATION.
UOS: THE -00 VERSION SHALL BE THE UNFINISHED VERSION OF PART SHOWN.
UOS: ALL DIMENSIONS APPLY BEFORE COATING. (ASME Y14.5M, sec. 2.4.1)

TOLERANCES UNLESS OTHERWISE SPECIFIED (UOS)
ASME Y14.5M-1994

| INCH | MILLIMETER |
|---|---|
| X.X ±.1 | X ±3 |
| X.XX ±.03 | X.X ±.8 |
| X.XXX ±.010 | X.XX ±.25 |

ANGLES
X° ±3°
X.X° ±1.0°
X.XX° ±.50°

DO NOT SCALE DRAWING

REF. T/W QP 4.20-2 FOR SUP. QUALITY REQ.
REF. T/W QP 4.20-3 FOR INT. QUALITY REQ.

| | | |
|---|---|---|
| DRAWN BY | SLM | 12/6/91 |
| CHECKED BY | JGP | 1/24/92 |
| PROJECT | LA30250-2 | |
| PRODUCT CODE | C06 (030-0250) | |
| CUSTOMER | | |
| CUSTOMER PART NUMBER | | |
| PART WEIGHT 20 | (2.2 LB) | |
| SURFACE AREA | | |


TriMark®
500 Bailey Avenue
P. O. Box 350
New Hampton, Iowa 50659 U.S.A.
Tel: 641-394-3188
Fax: 641-394-2392



This drawing and the information contained herein is the property of TriMark Corporation and shall not be used for any purpose without our written consent.


DESCRIPTION: ASSY,HSG/PDL,4.3,RH,CH751

| SIZE | SCALE | PART NUMBER 21 |
|---|---|---|
| D | 1.0 | 12219 |